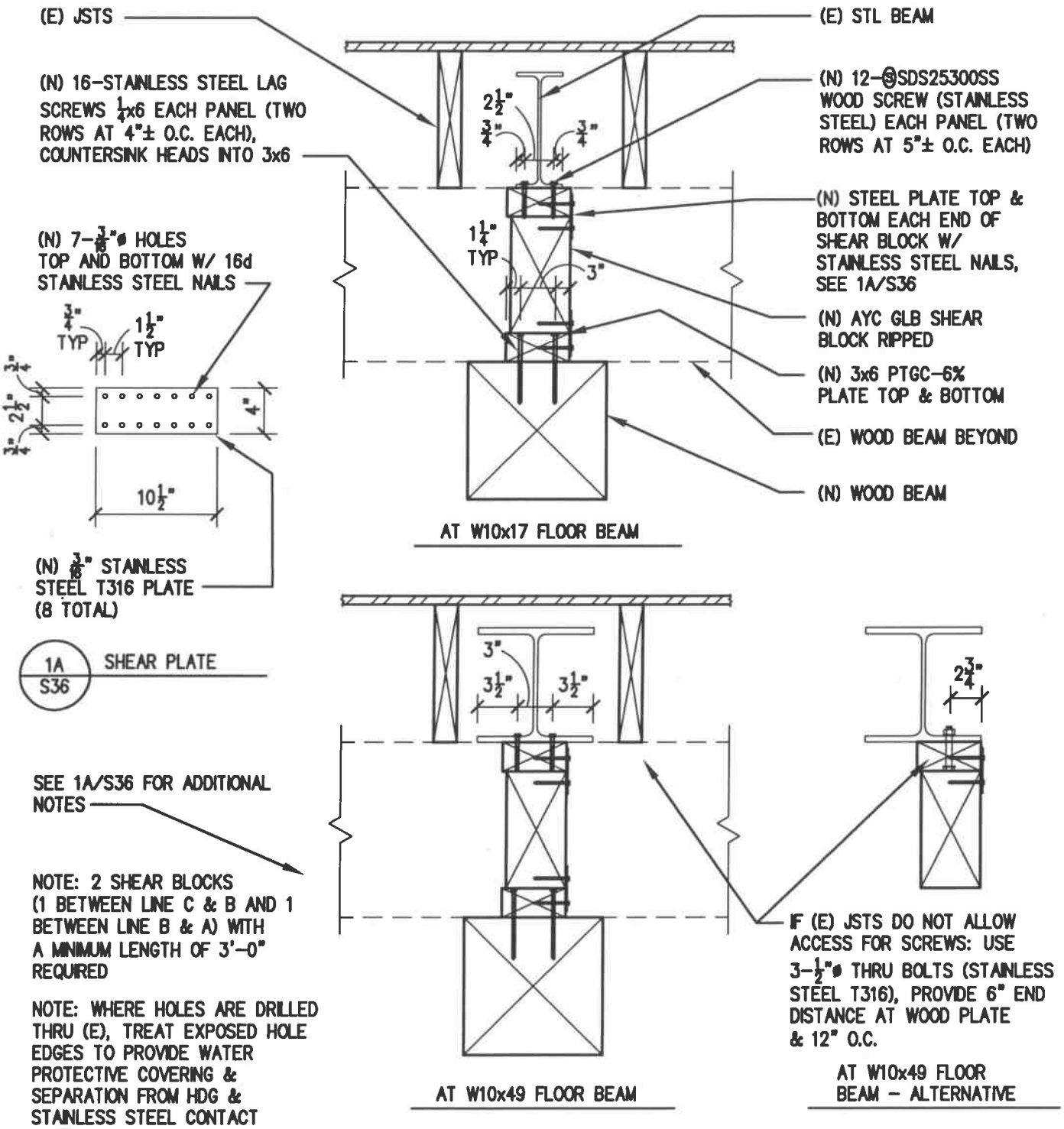

1 S36 SHEAR BLOCKS ABOVE BENT AT LINE 5

Copyright © 2010 J. B. Kardon and L. B. Karp

1"=1'-0"